THIS DRAWING IS UNPUBLISHED. RELEASED FOR PUBLICATION 20
© COPYRIGHT 20 BY TYCO ELECTRONICS CORPORATION. ALL RIGHTS RESERVED.

| PART NUMBER | REV | TERMINATOR | FEED TYPE | DESCRIPTION |
|---|---|---|---|---|
| 1528916-1 | A | LEADMAKER | MECH POST FEED | CUTS CARRIER |
| 1528916-2 | A | BENCH | MECH PRE FEED | CUTS CARRIER |
| 1528916-6 | A | LEADMAKER | MECH POST FEED | CONTINUOUS CARRIER |
| 7-1528916-1 | A | LEADMAKER | MECH POST FEED | -1 AND SPARE PARTS |
| 7-1528916-2 | A | BENCH | MECH PRE FEED | -2 AND SPARE PARTS |
| 7-1528916-6 | A | LEADMAKER | MECH POST FEED | -6 AND SPARE PARTS |
| 7-1528916-7 | A | - | - | SPARE PARTS KIT |

| CRIMP DATA | TE TERMINAL | | TE CRIMP SPECS |
|---|---|---|---|
| TERMINAL NAME: 1.5mm CONTACT-PIN FOR SINGLE WIRE SEAL | | | |
| CRIMP | SIZE | TYPE | RANGE |
| WIRE | 2.03 [.080 IN] | F | 0.50-1.00mm² |
| INSUL | 4.06 [.160 IN] | O | 3.40 MAX [.134 IN] △5 |
| WIRE STRIP LENGTH 4.20-4.80 [.165-.189 IN] | | | APPL INSTRUCTIONS 408-8322 & 408-8490 |
| TERMINAL APPL SPEC | 114-18040 △8 - | | FEED 12.50 [.492 IN] |

TERMINALS APPLIED

| TERMINAL | SEAL | - | - |
|---|---|---|---|
| 1703049 | 828904 | - | - |
| - | 828905 | - | - |
| - | - | - | - |
| - | - | - | - |

| WIRE SIZE | CRIMP HEIGHT * | REF SETTING * |
|---|---|---|
| 1.00mm² | 1.45 ±0.05 [.057 ±.002 IN] | A 8 |
| 0.75mm² | 1.36 ±0.05 [.054 ±.002 IN] | B 4 |
| 0.50mm² | 1.27 ±0.05 [.050 ±.002 IN] | C 2 |
| - | - | - |
| - | - | - |
| - | - | - |
| - | - | - |
| - | - | - |
| - | - | - |
| - | - | - |

△1 RECOMMENDED SPARE PARTS.

2. GREASE RAM, CAM, CAM FOLLOWER AND FEED ROD LIGHTLY.

△3 CERTAIN TERMINALS REQUIRE LUBRICATION. REFER TO THE APPLICATOR INSTRUCTION SHEET FOR MORE INFORMATION.

4. LUBRICATE DAILY PER THE APPLICATOR INSTRUCTION SHEET SUPPLIED WITH THE APPLICATOR.

△5 THIS APPLICATOR APPLIES TERMINAL WITH A SEAL. INSULATION DIA QUOTED IS OUTSIDE DIAMETER OF SEAL. WIRE INSULATION DIA IS DEPENDENT ON SEAL BEING APPLIED.

| SEAL PN | INS. DIA RANGE |
|---|---|
| 828904 | 1.2mm - 2.1mm [.047 - .083 IN] |
| 828905 | 2.2mm - 3.0mm [.087 - .118 IN] |

△6 APPLY TORQ-SEAL IN ALLEN SOCKET TO FILL HOLE AFTER FLAT HD HAS BEEN ADJUSTED TO CORRECT HEIGHT AT QUALIFICATION. APPLY #1-23419-5 LOC-TITE TO THREADS.

△7 CUT SCREW TO LENGTH AT ASSY.

△8 114-18040 TO BE USED FOR REFERENCE PURPOSES ONLY.

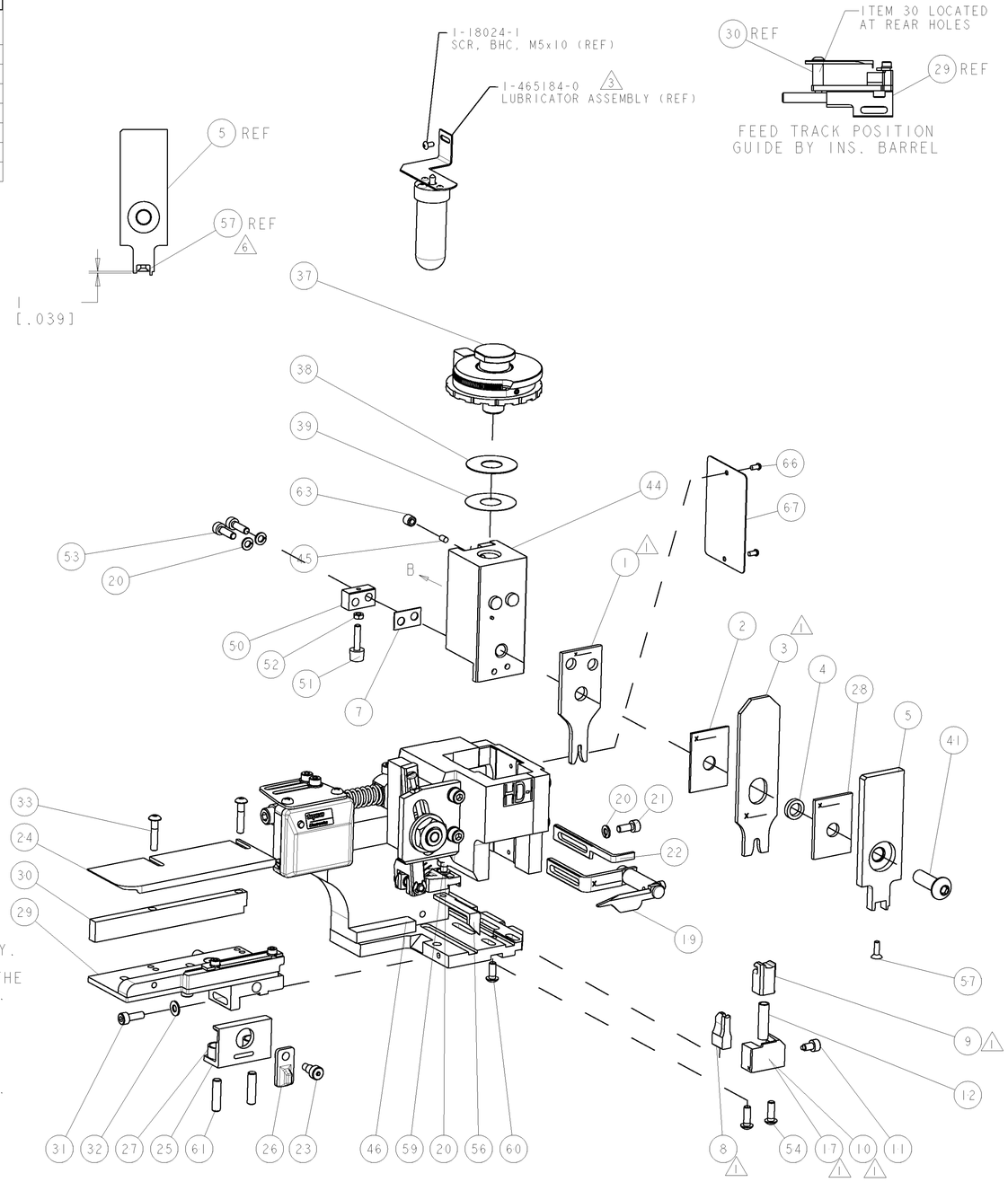


* WARNING
ON INSTALLATION, SET WIRE DISC TO LARGEST WIRE SIZE SETTING. USE OF SETTINGS BELOW MIN. REQUIRED CRIMP HEIGHT SETTING WILL CAUSE DAMAGE TO CRIMP TOOLING.

VIEW B ROTATED 180°

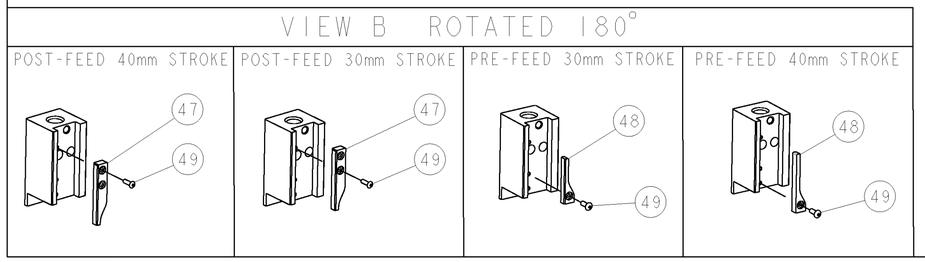


| -77 | -76 | -72 | -71 | -6 | -2 | -1 | PART NO | DESCRIPTION | ITEM NO |
|---|---|---|---|---|---|---|---|---|---|
| - | - | - | - | - | - | - | - | - | 84 |
| - | - | - | - | - | - | - | - | - | 83 |
| - | - | - | - | - | - | - | - | - | 82 |
| - | - | - | - | - | - | - | - | - | 81 |
| - | - | - | - | - | - | - | - | - | 80 |
| - | - | - | - | - | - | - | - | - | 79 |
| - | - | - | - | - | - | - | - | - | 78 |
| - | - | - | - | - | - | - | - | - | 77 |
| - | - | - | - | - | - | - | - | - | 76 |
| - | - | - | - | - | - | - | - | - | 75 |
| - | - | - | - | - | - | - | - | - | 74 |
| -77 | -76 | -72 | -71 | -6 | -2 | -1 | PART NO | DESCRIPTION | ITEM NO |

SET UP GAGE 458637-3

| LOC | DIST |
|---|---|
| A | 66 |

REVISIONS

| P | LTR | DESCRIPTION | DATE | DWN | APVD |
|---|---|---|---|---|---|
| | A | SEE ECO-08-022909 | 15SEP2008 | LJL | MC |

| -77 | -76 | -72 | -71 | -6 | -2 | -1 | PART NO | DESCRIPTION | ITEM NO |
|---|---|---|---|---|---|---|---|---|---|
| - | - | - | - | - | - | - | - | - | 73 |
| - | - | - | - | - | - | - | - | - | 72 |
| - | 1 | 1 | 1 | 1 | 1 | 1 | 1338705-3 | DOCUMENTATION PACKAGE | 71 |
| - | - | - | - | - | - | - | - | - | 70 |
| - | - | - | - | - | - | - | - | - | 69 |
| - | - | - | - | - | - | - | - | - | 68 |
| - | 1 | 1 | 1 | 1 | 1 | 1 | 461264-5 | PLATE, IDENTIFICATION | 67 |
| - | 2 | 2 | 2 | 2 | 2 | 2 | 21017-2 | SCREW, DRIVE | 66 |
| - | - | - | - | - | - | - | - | - | 65 |
| - | - | - | - | - | - | - | - | - | 64 |
| - | 1 | 1 | 1 | 1 | 1 | 1 | 3-18031-0 | SCR, SET, CUP POINT M6 X 6.0 | 63 |
| - | - | - | - | - | - | - | - | - | 62 |
| - | 2 | 2 | 2 | 2 | 2 | 2 | 2-18032-5 | SCR, SET, FLT POINT M5 X 20.0 | 61 |
| - | 1 | 1 | 1 | 1 | 1 | 1 | 18024-7 | SCR, BTN SKT HD CAP (M4 X 10.0) | 60 |
| - | 1 | 1 | 1 | 1 | 1 | 1 | 5-18022-2 | SCR, HEX HD CAP M4 X 8.0 | 59 |
| - | - | - | - | - | - | - | - | - | 58 |
| - | 1 | 1 | 1 | 1 | 1 | 1 | 985575-3 | SCR, FLT SKT HD CAP M3 X 10.0 | 57 |
| - | 1 | 1 | 1 | 1 | 1 | 1 | 1338685-1 | PAWL, FEED | 56 |
| - | - | - | - | - | - | - | - | - | 55 |
| - | 2 | 2 | 2 | 2 | 2 | 2 | 18024-8 | SCR, BTN SKT HD CAP (M4 X 12.0) | 54 |
| △7 - | 2 | 2 | 2 | 2 | 2 | 2 | 9-18023-6 | SCR, SKT HD CAP M4 X 14.0 | 53 |
| - | 1 | 1 | 1 | 1 | 1 | 1 | 18030-1 | NUT, HEX, REG M3 | 52 |
| - | 1 | 1 | 1 | 1 | 1 | 1 | 811242-5 | BUMPER, HOLD DOWN | 51 |
| - | 1 | 1 | 1 | 1 | 1 | 1 | 690753-2 | SPACER, TONKER | 50 |
| - | 1 | 1 | 1 | 1 | 1 | 1 | 18024-3 | SCR, BTN SKT HD CAP (M3 X 10.0) | 49 |
| - | - | 1 | - | - | 1 | - | 1338675-1 | CAM, UNIVERSAL PRE FEED | 48 |
| - | 1 | - | 1 | 1 | - | 1 | 1338676-1 | CAM, UNIVERSAL POST-FEED | 47 |
| - | 1 | 1 | 1 | 1 | 1 | 1 | 1320999-3 | APPLICATOR SUBASSEMBLY, HDI | 46 |
| - | 1 | 1 | 1 | 1 | 1 | 1 | 690191-1 | PLUG,NYLON | 45 |
| - | 1 | 1 | 1 | 1 | 1 | 1 | 1338660-1 | RAM | 44 |
| - | - | - | - | - | - | - | - | - | 43 |
| - | - | - | - | - | - | - | - | - | 42 |
| - | 1 | 1 | 1 | 1 | 1 | 1 | 2-18024-6 | SCR, BTN SKT HD CAP (M8 X 25.0) | 41 |
| - | - | - | - | - | - | - | - | - | 40 |
| - | 1 | 1 | 1 | 1 | 1 | 1 | 690125-1 | SHIM SUB-ASSY | 39 |
| - | 1 | 1 | 1 | 1 | 1 | 1 | 469367-9 | SHIM | 38 |
| - | 1 | 1 | 1 | 1 | 1 | 1 | 879103-3 | FINE ADJUST HEAD ASSEMBLY | 37 |
| - | - | - | - | - | - | - | - | - | 36 |
| - | - | - | - | - | - | - | - | - | 35 |
| - | - | - | - | - | - | - | - | - | 34 |
| - | 2 | 2 | 2 | 2 | 2 | 2 | 1-18024-0 | SCR, BTN SKT HD CAP (M4 X 20.0) | 33 |
| - | 1 | 1 | 1 | 1 | 1 | 1 | 18027-2 | WASHER, FLAT, REG M4 | 32 |
| - | 1 | 1 | 1 | 1 | 1 | 1 | 1-18023-2 | SCR, SKT HD CAP M4 X 12.0 | 31 |
| - | 1 | 1 | 1 | 1 | 1 | 1 | 1320908-8 | SPACER, STRIP GUIDE | 30 |
| - | 1 | 1 | 1 | 1 | 1 | 1 | 1633073-1 | STRIP GUIDE ASSEMBLY | 29 |
| - | 1 | 1 | 1 | 1 | 1 | 1 | 1-455888-9 | SPACER, CRIMPER | 28 |
| - | 2 | 2 | 2 | 2 | 2 | 2 | 1-22284-0 | SPRING, COMPRESSION | 27 |
| - | 1 | 1 | 1 | 1 | 1 | 1 | 356835-1 | LEVER, DRAG RELEASE | 26 |
| - | 1 | 1 | 1 | 1 | 1 | 1 | 240792-1 | DRAG, TERMINAL | 25 |
| - | 1 | 1 | 1 | 1 | 1 | 1 | 1320928-3 | PLATE, STRIP GUIDE | 24 |
| - | 1 | 1 | 1 | 1 | 1 | 1 | 980371-4 | SCR, SKT HD SHLDR 5.0 DIA X 6.0 | 23 |
| - | 1 | - | 1 | 1 | - | 1 | 690472-2 | STRIPPER | 22 |
| - | 1 | 1 | 1 | 1 | 1 | 1 | 1-18023-1 | SCR, SKT HD CAP M4 X 10.0 | 21 |
| - | 4 | 4 | 4 | 4 | 4 | 4 | 18025-2 | WASHER, SPRG LOCK, REG M4 | 20 |
| - | - | 1 | - | - | 1 | - | 1424364-1 | STRIPPER/ WIRE STOP ASSY | 19 |
| - | - | - | - | - | - | - | - | - | 18 |
| △1 - | 1 | - | - | 1 | - | - | 1338684-2 | SHEAR HOLDER, FRONT | 17 |
| - | - | - | - | - | - | - | - | - | 16 |
| - | - | - | - | - | - | - | - | - | 15 |
| - | - | - | - | - | - | - | - | - | 14 |
| - | - | - | - | - | - | - | - | - | 13 |
| - | 1 | 1 | 1 | 1 | 1 | 1 | 3-22280-3 | SPRING, COMPRESSION | 12 |
| - | 1 | 1 | 1 | 1 | 1 | 1 | 356885-5 | STOP, SHEAR | 11 |
| △1 - | - | 1 | 1 | - | 1 | 1 | 1-1320921-0 | SHEAR HOLDER, FRONT, CUT | 10 |
| △1 - | 1 | 1 | 1 | 1 | 1 | 1 | 318707-1 | FLOATING SHEAR, FRONT | 9 |
| △1 1 | 2 | 2 | 2 | 1 | 1 | 1 | 1338693-9 | ANVIL, COMBINATION .080 | 8 |
| - | 1 | 1 | 1 | 1 | 1 | 1 | 3-240641-8 | SPACER | 7 |
| - | - | - | - | - | - | - | - | - | 6 |
| - | 1 | 1 | 1 | 1 | 1 | 1 | 1338680-1 | DEPRESSOR, SHEAR | 5 |
| - | 1 | 1 | 1 | 1 | 1 | 1 | 3-238011-3 | BLOCK, CRIMPER SPACER | 4 |
| △1 1 | 2 | 2 | 2 | 1 | 1 | 1 | 8-683454-9 | CRIMPER, INSULATION O | 3 |
| - | 1 | 1 | 1 | 1 | 1 | 1 | 1-455888-1 | SPACER, CRIMPER | 2 |
| △1 1 | 2 | 2 | 2 | 1 | 1 | 1 | 1-456405-6 | CRIMPER, WIRE PREMIUM | 1 |
| -77 | -76 | -72 | -71 | -6 | -2 | -1 | PART NO | DESCRIPTION | ITEM NO |

THIS DRAWING IS A CONTROLLED DOCUMENT FOR TYCO ELECTRONICS CORPORATION. IT IS SUBJECT TO CHANGE AND THE CONTROLLING ENGINEERING ORGANIZATION SHOULD BE CONTACTED FOR THE LATEST REVISION.

DIMENSIONS: mm [IN]

TOLERANCES UNLESS OTHERWISE SPECIFIED:
0 PLC ±-
1 PLC ±-
2 PLC ±-
3 PLC ±-
4 PLC ±-
ANGLES ±-

MATERIAL - -
FINISH - -

DWN 30JUNE2008 M.BETTISS
CHK -
APVD 30JUNE2008 M.CLIFFORD
PRODUCT SPEC -
APPLICATION SPEC See Table
WEIGHT -

Tyco Electronics
Tyco Electronics
Harrisburg, PA 17105-3608

NAME
FINE ADJUST SIDE FEED
HDI APPLICATOR
-

| SIZE | CAGE CODE | DRAWING NO | RESTRICTED TO |
|---|---|---|---|
| A1 | 00779 | C-1528916 | - |

CUSTOMER DRAWING | SCALE 3:5 | SHEET 1 OF 1 | REV A

AMP 4805 REV 31MAR2000

Pro/ENGINEER DRAWING